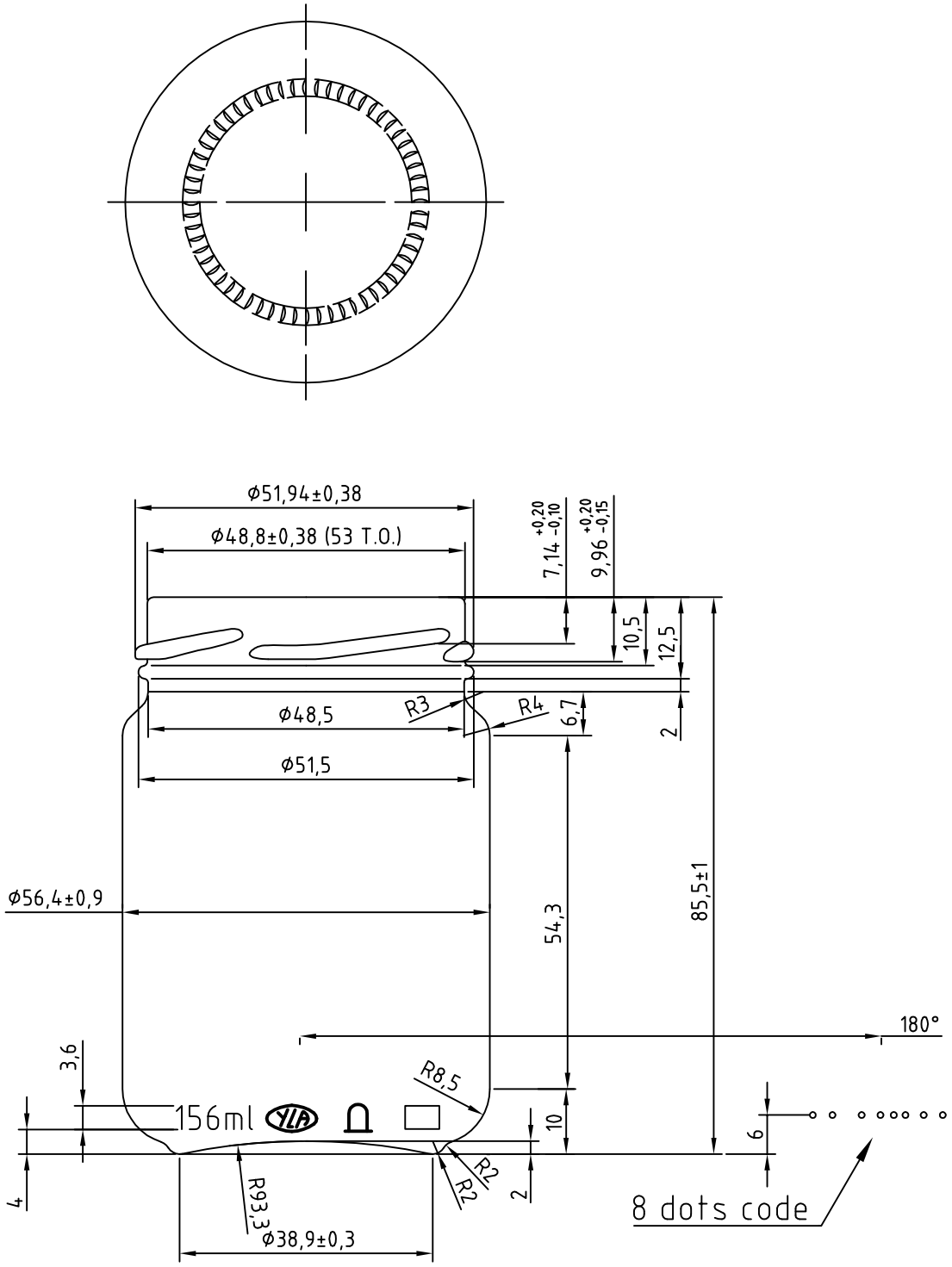

NAME	DATE	REVISIONS	MOLD NO.	8527		A4	DRUJBA Glassworks S.A. A Member of Yioula Group		
			FINISH	FIN 072					
			CAP. BRIMF.	156 ± 4,7ml	MACHINE	DG 4 1/4"	BOTTLE 15,6cl JAR VASO		
			CAP. FILLPT.		DATE	26/01/2011			
			FILL LINE		DRAWN	Angelov		CAT.No & DWG No 22010/1	
			WEIGHT	100gr	CHECKED	Angelov			
			COLOR	FLINT	CONFIRMED			SHEET: 1/1	SCALE: 1:1